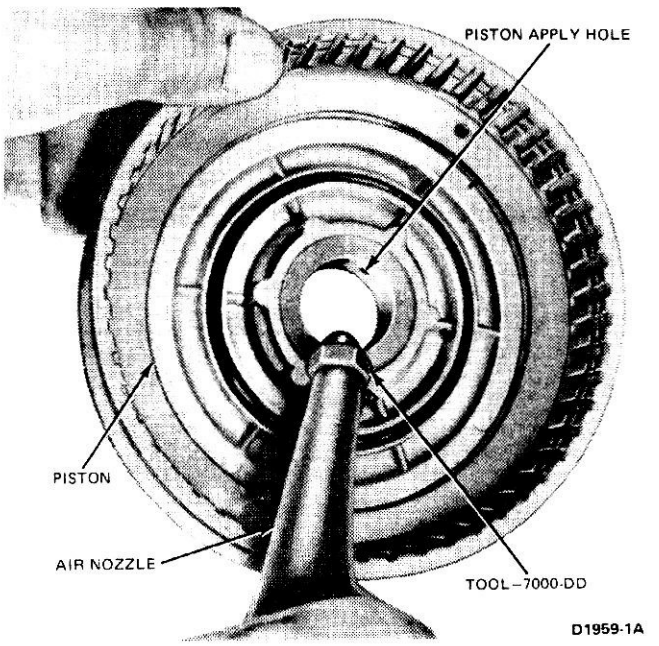

FIG. 44 Removing Front Clutch Piston

bushing wall. Pry the loose ends of the bushing up with an awl and remove the bushing.

Assembly

1. If the input shaft bushing was removed, slip a new bushing over the end of the installation tool and position the tool and bushing to the bushing hole. Then, press the bushing into the input shaft as shown in Fig. 45.
2. Lubricate all parts with transmission fluid. Install a new piston inner seal ring in the clutch cylinder. Install a new piston outer seal in the groove in the piston.
3. Install the piston in the clutch housing. **Make sure the steel bearing ring is in place on the piston.**
4. Position the release spring in the clutch cylinder with the concave side up. Place the release spring compressor on the spring, and compress the spring with an arbor press. Then install the snap ring as shown in Fig. 43. **Make sure the snap ring is fully seated in the groove.**
5. Install the front clutch housing on the primary sun gear shaft by rotating the clutch units to mesh the rear clutch plates with the serrations on the clutch hub. **Do not break the seal rings.**
6. Install the clutch hub in the clutch cylinder with the deep counterbore down (Fig. 46). Install the thrust washer on the clutch hub.
7. Install the pressure plate in the clutch cylinder with the bearing surface up (Fig. 47). Install the composition and the steel clutch plates alternately, starting with a composition plate (Fig. 48). When new composition clutch plates are used, soak the plates in automatic transmission fluid for 15 minutes before they are assembled.
8. The final friction plate to be installed is selective. Install the thickest plate that will be a minumum of 0.010 inch below input shaft shoulder in cylinder. For all other plates, use the thinnest available. Refer to the Specifications at end of this Part for available plate thicknesses.

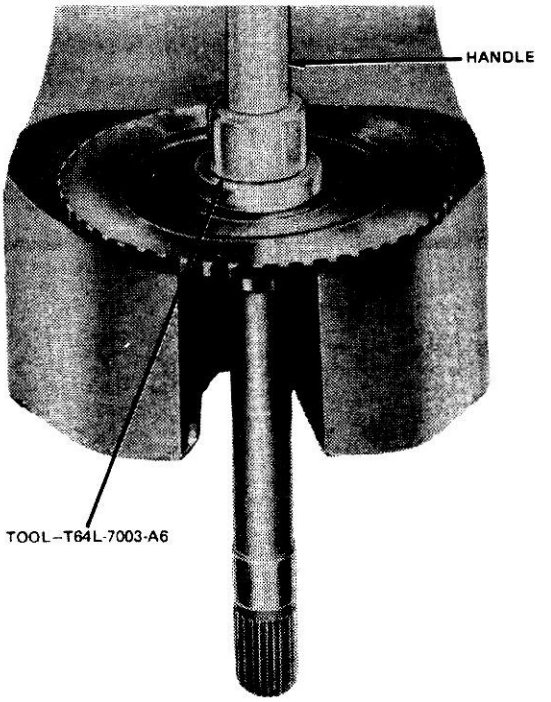

FIG. 45 Installing Input Shaft Bushing

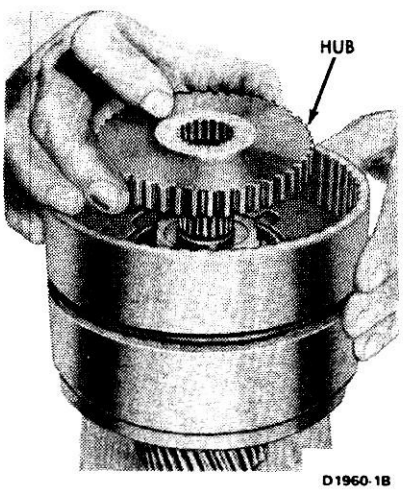

FIG. 46 Installing Clutch Hub

9. Install the turbine shaft in the clutch cylinder, and then install the snap ring. **Make sure the snap ring is fully seated in the groove.**
10. Install the thrust washer on the turbine shaft.

PRIMARY SUN GEAR SHAFT

Disassembly

1. Position the primary sun gear shaft in the clutch bench fixture.
2. Check the fit of the seal rings in their respective bores. If equipped with cast iron seal rings, a

"This publication contains material that is reproduced and distributed under a license to Detroit Iron from Ford Motor Company. No further reproduction or distribution of the Ford Motor Company material is allowed without the express written permission of Ford Motor Company."

DETROIT IRON

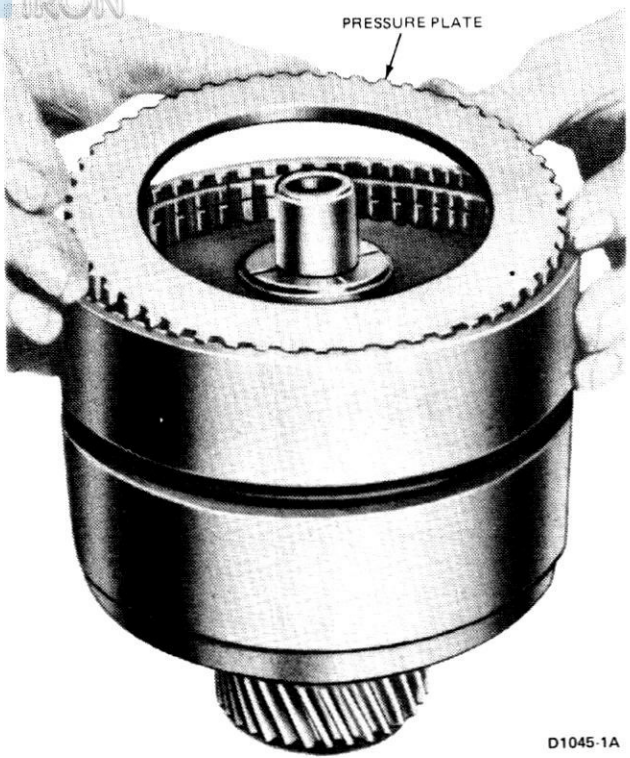

FIG. 47 Installing Pressure Plate

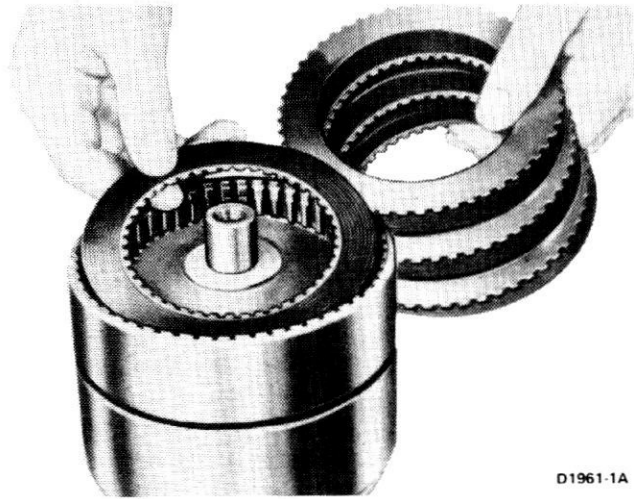

FIG. 48 Installing Clutch Plates

clearance of 0.002 to 0.009 inch should exist between the ends of the rings.

If equipped with plastic seals that are worn or damaged, cut the seals from the shaft with a sharp knife. Be careful not to score the ring grooves.

Assembly

1. Replace the plastic seals with cast iron seal rings, and check for free movement in the groove.

"This publication contains material that is reproduced and distributed under a license to Detroit Iron from Ford Motor Company. No further reproduction or distribution of the Ford Motor Company material is allowed without the express written permission of Ford Motor Company."

SPECIFICATIONS

APPROXIMATE REFILL CAPACITIES FMX TRANSMISSION

	U.S. Measure	Imp. Measure
All Car Lines	11	9-1/4

SELECTIVE THRUST WASHERS FMX TRANSMISSION

Identification No.	Thrust Washer Thickness – Inch
By Thickness	0.061-0.063
	0.067-0.069
	0.074-0.076
	0.081-0.083

CLUTCH PLATES FMX TRANSMISSION

Trans. Model	Forward Clutch				Rear Clutch		
	Steel Plates	Friction Plates	Selective Plate Thickness	Selective Plate Identification	Steel Plates	Friction Plates	Free Pack Clearance
PHB	4	5 ①	0.0565-0.0605	No Stripe	4 ②	4	0.030-0.055
			0.0705-0.0745	One Stripe			
			0.0845-0.0885	Two Stripes			

① Last plate (Friction) in forward clutch is selective. Install thickest plate in pack that will be a minimum of 0.010 inch below input shaft shoulder in cylinder. All other friction plates in pack are thinnest available.

② Plus one external tabbed waved plate installed next to piston.

CHECKS AND ADJUSTMENTS FMX TRANSMISSION

Operation	Specification
Transmission End Play Check	0.010-0.029 (Selective Thrust Washers Available)
Turbine and Stator End Play Check	New or rebuilt 0.023 max., Used 0.050 max.
Front Band Adjustment (Use 1/4 inch spacer between adjustment screw and servo piston stem)	Adjust screw to 10 in-lbs torque. Remove spacer, hold screw and then tighten screw an additional 3/4 turn. Torque locknut to 20-25 ft-lb.
Rear Band Adjustment	Loosen locknut. Adjust screw to 10 ft-lb torque, then back off exactly 1-1/2 turns. Hold screw and tighten locknut to 35-40 ft-lb.
Primary Sun Gear Shaft Ring End Gap Check	0.002-0.009
Rear Clutch Selective Snap Ring Thickness	0.060-0.064, 0.074-0.078, 0.088-0.092, 0.102-0.106

TORQUE LIMITS FMX TRANSMISSION

Item	Ft-Lb	Item	Ft-Lb	Item	Ft-Lb
Converter to Flywheel	20-30	Regulator to Case	17-22	Converter Drain Plug	15-28
Converter Hsg. to Trans. Case	40-50	Planetary Support to Trans. Case	20-30	Rear Band Adjusting Screw Locknut	35-40
Front Pump to Trans. Case	17-22	Control Valve Body to Trans. Case	8-10	Front Band Adjusting Screw Locknut	20-25
Front Servo to Trans. Case	30-35	Diaphragm Assy. to Case	15-23	Manual Valve Inner Lever to Shaft	20-30
Rear Servo to Trans. Case	40-45	Cooler Return Fitting	15-20	Downshift Lever to Shaft	17-20
Oil Pan to Case	10-13	Extension Assy. to Trans. Case	30-40	Filler Tube to Engine	20-25
Converter Cover to Converter Hsg.	12-16	Pressure Gauge Tap	7-15	Transmission to Engine	40-50

Item	In-Lb	Item	In-Lb	Item	In-Lb
Governor to Counterweight	50-60	Front Servo Release Piston	20-30	to Valve Body	20-30
Governor Valve Body Cover Screws	20-30	End Plates to Body	20-30	T.V. Body to Valve Body	20-30
Pressure Regulator Cover Screws	20-30	Stator Support to Pump	25-35	Lower Valve Body Clearance & Plate to Valve Body	20-30
Control Valve Body Screws (10-24)	20-30	Lower Body & Cover Plate			

SPECIAL TOOLS FMX TRANSMISSION

Ford Tool No.	Description	Ford Tool No.	Description
T50T-100-A and TOOL-1175-AB	Seal Remover	T61L-7657-B	Transmission Extension Hsg. Oil Seal Replacer
		T57P-7697-A	Transmission Extension Hsg. Bushing Remover
TOOL-7000-DD	Air Nozzle Rubber Tip Assembly	T57P-7697-B	Transmission Extension Hsg. Bushing Replacer
T64L-7003-A	Automatic Transmission Bushing Kit Remover and Replacer	TOOL-77067	Dial Indicator Support Fixture
		T65L-77515-A	Rear Clutch Spring Compressor
T68P-7D158	Seal Installer and Protector	T71P-77570-B	
T70P-7B200-A	Rear Band Torque Wrench ①	T71P-77370-H	
T70P-7B200-B	Rear Band Lock Nut Wrench ①	TOOL-77565	Front Clutch Spring Compressor
T58L-7195-A	Band Adjustment Wrench	T63L-77837-A	Front Pump Seal Replacer
TOOL-7225-BA	Front Band Adjustment Wrench		

① LTD II/Cougar/Thunderbird ② Except LTD II/Cougar/Thunderbird

CD2138-2J

"This publication contains material that is reproduced and distributed under a license to Detroit Iron from Ford Motor Company. No further reproduction or distribution of the Ford Motor Company material is allowed without the express written permission of Ford Motor Company."

Ford OFFICIAL LICENSED PRODUCT DETROIT IRON

NOISE, VIBRATION AND HARSHNESS DIAGNOSIS

GROUP 18

PART TITLE	PART NO.	PART TITLE	PART NO.
Noise, Vibration and Harshness Diagnosis – General Instructions	18-01		

CF2535-2A

Noise, Vibration and Harshness Diagnosis—General Instructions

PART 18-01

Applies To All Cars

SUBJECT	PAGE	SUBJECT	PAGE
TESTS		TESTS (Cont'd.)	
Checks For Vibration With Tip-In	01-3	Radial Ply Tire	01-5
Checks For Vibration Without Tip-In	01-4	Road Testing	01-1
Customer Complaint Description	01-1	Suspension Inspection	01-2
Engine Accessory Check	01-3	Tip-In Moan Noise	01-5
Engine Run-up Check	01-2	Tire Inspection	01-2

CF2536-2A

TESTS

CUSTOMER COMPLAINT DESCRIPTION

Obtaining a complete description of the condition from the customer may give important clues for diagnosing the situation. Ask the customer if any unusual characteristics accompany the complaint. Find out if the complaint existed when the vehicle was new, if it came about gradually, or if it suddenly appeared.

A gradual appearance of the complaint indicates a deterioration of a component, such as tires, U-joints, an accessory drive belt, or a wheel bearing.

A sudden appearance of the complaint could indicate a lost wheel balance weight or lost driveshaft balance weight.

NOTE: Information gained from the description of the customer's concern should never be used in place of facts gained from diagnosis, nor should it be used in an attempted short cut fix. In the long run, time will be saved by adhering to the diagnositc procedures shown in this manual.

ROAD TESTING

When practical, road testing should be performed on the same road where the noise, vibration or harshness conditions are noticed by the customer. However, if this is not practical, a similar road course may be selected with conditions as nearly the same as described by the customer. Prior to road testing, install a tachometer and

"This publication contains material that is reproduced and distributed under a license to Detroit Iron from Ford Motor Company. No further reproduction or distribution of the Ford Motor Company material is allowed without the express written permission of Ford Motor Company."

set tire pressures to recommended specifications. Notice if the tire pressures are above recommended settings. If so, it would be a cause of a harsh ride condition. When performing a road test, the following factors must be taken into consideration to properly isolate the condition. **Remember that a thorough road test will quickly isolate the problem area.**

a. At what road speed does the complaint occur? Low speed vibration is an indication of tire runout conditions. High speed, 40 mph and up, vibration is an indication of tire imbalance.

b. At what engine rpm does the complaint occur? The tachometer reading will be used later in the engine run up test.

c. Does the vehicle have a harsh ride quality? If so, the cause is tires or suspension.

d. Transmission gear ratios will tend to eliminate certain components as contributing factors to the customer's concern. For example, if a vibration appears at 50 mph in high gear at a given tachometer rpm, but disappears in intermediate gear at 50 mph, it is probable that the vibration is being generated in the engine or its accessories. As a further check, operate the vehicle at the noted engine rpm in intermediate gear to see if the vibration still exists. If the vibration still exists, the cause is in the engine or its accessories. If the vibration disappears, the cause is probably in the drive line.

e. Drive at a constant speed within the noted range to determine if the intensity changes several times a minute, indicating two or more problems.

f. Does the symptom come and go with tip in? (accelerating and decelerating). If so, the condition is in the drive line.

g. The operating temperature of the vehicle components may have a direct bearing on a problem. Often noise and vibration problems appear after the vehicle has attained normal operating temperatures. Conversely, the symptom may only appear at engine warm up. This may be an indication of a grounded exhaust system.

TIRE INSPECTION

Inspect tires for abnormal wear such as cupping on the outer tread rows. Also check for bulges in the tread of sidewall areas which indicate a tread or body ply separation. These conditions may induce vibration in the vehicle.

a. Nylon cord tires have an inherent stiff ride quality, and will produce temporary flat spots when they have been setting for extended periods of time, such as overnight. Advise the customer of the characteristics of the nylon tires.

b. Over-inflated tires will give a hard ride quality. Set the tire pressures to the recommended setting and advise the customer to have the tire pressures checked frequently.

c. Inspect tires for the correct size and type. As an example, 8.45 x 15 4 ply tires with an 8 ply rating are intended for trailer towing. Tires of this nature produce a harsh ride when the vehicle is in an unloaded condition. Advise the customer of this situation.

d. Check for tires that are not recommended by the manufacturer. Different brands of tires often give a different ride quality to the vehicle. Advise the customer of the situation.

e. The use of a set of test tires will be helpful in determining if the tires are the cause of the customer's concern. Balance the test tires on the vehicle before road testing.

NOTE: Before removing original tires and wheels, mark them as to location (right front—left front, etc.) and position (mark the wheel stud nearest the tire valve) to facilitate reinstallation.

SUSPENSION INSPECTION

a. Check for suspension that is not lubricated properly. Refer to Group 50 for proper lubricant and lubricating procedures.

b. Check for suspension components installed with a preload on pivot points and bushings. (As an example, a leaf spring with a rear shackle bound up.) To neutralize a condition such as this, loosen the attaching nuts and jounce the vehicle to position the components in a neutral condition; then, torque the nuts to specifications.

c. Check for bent or bound-up shock absorbers. Visually inspect the shock absorber bushings to see if they are centered or the shafts are bent. If this condition exists, properly position the shock absorber or replace it if it is bent.

d. Check for heavy duty suspension components installed on the vehicle. Competition or heavy duty suspension components have hard ride characteristics. If these components are installed on a vehicle and the customer is concerned about the harsh ride, the components will have to be replaced with standard suspension parts.

ENGINE RUN UP CHECK

This procedure is useful in separating drive line and tire vibration from engine and accessory vibration. A tachometer is required to correlate engine rpm with vehicle speed. With the vehicle stationary and the transmission in park or neutral, run the engine up to the symptom rpm encountered on the road test. If the symptom appears, the vibration is probably caused by an engine accessory such as the A/C compressor or a drive belt. However, if the symptom does not appear in park or neutral, perform a stall test with the vehicle in drive range.

CAUTION: While making a stall test in drive range on automatic transmission equipped vehicles, do not hold the throttle open for more than 5 seconds at a time. Then move the selector lever to neutral and run the engine at 1,000 rpm for about 15 seconds to cool the converter.

If the symptom appears during the stall test, the disturbance is probably caused by bound-up engine mounts or exhaust system components that are grounding.

"This publication contains material that is reproduced and distributed under a license to Detroit Iron from Ford Motor Company. No further reproduction or distribution of the Ford Motor Company material is allowed without the express written permission of Ford Motor Company."

DETROIT IRON OFFICIAL LICENSED PRODUCT

The engine run up test is applicable to manual transmissions, with the exception of the stall test.

NOTE: Because the vehicle is stationary during engine run up checks, other noises and/or vibrations will become noticeable which were not evident under normal driving conditions. For instance, all engines have a natural vibration point which can be felt in neutral but not under normal driving conditions. For this reason, the use of a tachometer is mandatory to verify the presence of the real cause.

ENGINE ACCESSORY CHECK

a. With the engine stopped, visually inspect, adjust, torque or replace:

- all drive belts for cracking or fraying.
- the condition of all pulleys. See if they are bent, nicked or misaligned.
- the fan for bent or missing blades or the fan spacer for burrs or foreign material behind it.
- the accessory attaching bolts, such as the A/C compressor and power steering pump mounting brackets.

all the drive belts for proper tension.

b. With the engine running at idle or at the noted rpm, visually inspect:

- all drive belts for variation in belt width or belt whip.
- all pulleys for axial or radial run out.

Remove the drive belts one at a time until the vibration is eliminated. This will indicate which belt or accessory is causing the customer's concern. Replace the belts or pulleys as necessary. A stethoscope or other probing device may save you time in diagnosing an accessory problem.

c. Engine Stall Test:

Neutralize the engine mounts and the number 3 crossmember. This can be the cause of restricting the dampening effect of the engine mounts.

NOTE: To neutralize the engine mounts and the number 3 crossmember, loosen the attaching bolts, start the engine, shift to drive with the engine idling and then back to neutral. Shut off the engine and torque the bolts to specification.

Neutralize the exhaust system and hangers. A grounded or strained exhaust system can produce noise or a vibration.

NOTE: To neutralize the exhaust system, run the engine to bring the exhaust system components to their normal operating temperature. Shut the engine off and loosen the exhaust manifold pipe flanges and all hangers. Reposition all exhaust components so that they hang free and straight. Start the engine and shift to drive and then back to neutral. Shut off the engine and torque all nuts and bolts for the flanges and hangers. Be certain that no grounding condition exists and that adequate clearance exists along the entire length of the exhaust system.

CHECKS FOR VIBRATION WITH TIP IN

Drive line vibration can be dependent upon vehicle speed and tip in (acceleration and deceleration). Drive line vibrations frequently originate with excessive run out of the drive line components; namely, pinion companion flange and driveshaft run out. Run out in these components will produce vibrations because the components will be rotating on a center other than a center of balance. Imbalance of the driveshaft will also produce a vibration. Low speed vibration can be caused by improper drive line angles.

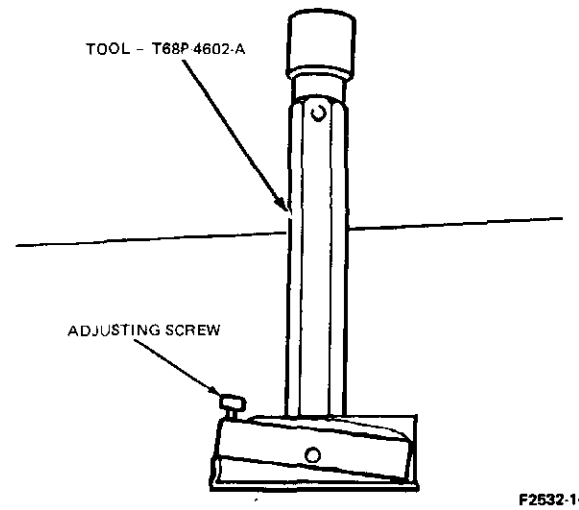

FIG. 1 Positioning Tool on V-Magnet

Driveline Angle Checking Procedure

Check for improper driveline angles.

a. Position the vee magnet (part of Tool T68-4602-A) on the drive shaft away from welds and balance weights.

b. From the left side of the vehicle, position the magnetized Tool T68P-4602-A on the vee magnet with the adjusting screw to the left (Fig. 1). Adjust the dial on the tool with the adjusting screw until the left-hand edge of the bubble is exactly on the zero line.

c. Now position the magnetized tool on a U-joint bearing cap as shown in Fig. 2 with the tool in the same relative position as it was on the vee magnet (Fig. 1).

d. Read the position of the bubble's lefthand edge on the scale to determine the drive shaft pinion angle. Compare to the degree specification in the chart at the end of Part 14-32. If adjustment is necessary, adjust to within plus or minus 30 minutes. If the vehicle is loaded, remove load to achieve "curb load" (empty car with full load of gas).

Rear Axle Companion Flange Runout Check

Refer to Part 15-01 for instructions on making this check.

Drive Line Balance Check

Refer to Part 15-60 for instructions on making this check.

"This publication contains material that is reproduced and distributed under a license to Detroit Iron from Ford Motor Company. No further reproduction or distribution of the Ford Motor Company material is allowed without the express written permission of Ford Motor Company."

CHECKS FOR VIBRATION WITHOUT TIP IN

Vibrations that occur at steady road speeds of 40 mph or above, are usually attributed to tire and wheel imbalance. These vibrations can be felt in the steering wheel, floor pan, and in the seat. Excessive tire and wheel run out can produce an effect similar to an unbalanced tire and wheel. The tires must be warm prior to balancing or checking tire and wheel run out.

a. Check the tire and wheel balance. An apparent imbalanced tire can be caused by a lost wheel weight, a poorly balanced brake drum, excessive axle shaft run out, or by not being balanced properly. Perform an "on-the-car" balance check of all four (4) tire-wheel assemblies.

NOTE: Balance check of tire-wheel assemblies must be made by spinning the assemblies, one at a time, with the car supported by the frame members of the unit, allowing the suspension to hang in its free position per instructions of the Rotunda Balancer.

b. Check the tire and wheel run out. Irregularities in the tire, axle shaft or wheel can cause excessive runout.

Using the Rotunda Tire Runout Gauge, Part No. 19-0001 or equivalent, or a dial indicator mounted on a stand, check the "radial" runout of the tire and wheel assemblies on the car. This is done with the roller of the gauge running on the center tread of the tire and pointing to the center of the wheel for a radial runout check, and at the scrub rib for a lateral check. (Refer to Fig. 3).

If the radial runout on the center tread of the tire exceeds the service performance limit of .070 inch, measure the radial and lateral runout of the wheels. Wheel radial and lateral runouts are checked as shown in Fig. 3.

If the radial or lateral runout of the wheel exceeds .070 inch, remove the wheel and rotate it two studs on the drum and re-measure the radial and lateral runout of the wheel and tire assembly. Continue rotating the wheel until runout is within the specification or replace the wheel, if required.

If the runout of the wheel-tire assembly is reduced to the proper specification or less, the unit should exhibit acceptable performance after re-balance.

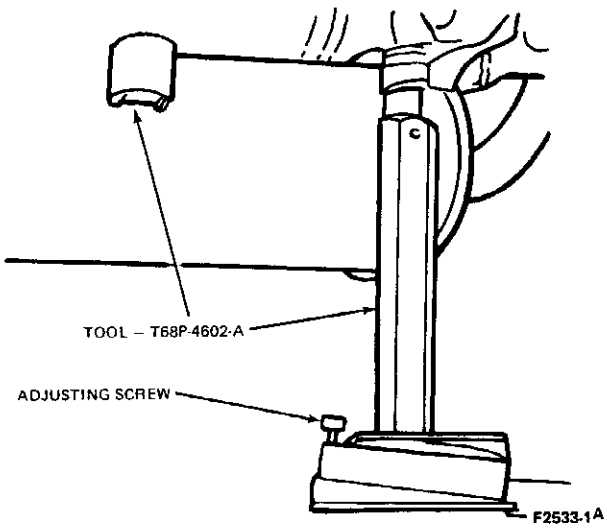

FIG. 2 Measuring Pinion Angle

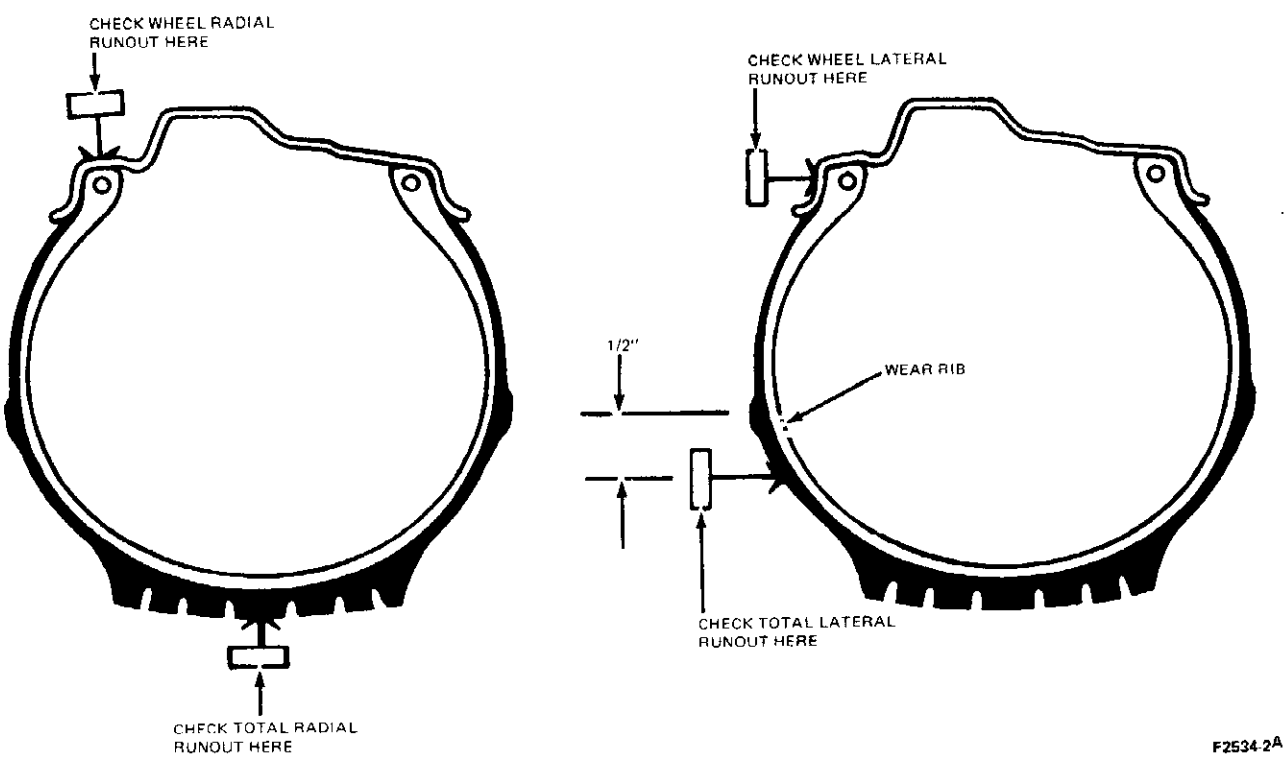

FIG. 3 Checking Wheel Lateral and Radial Runout

"This publication contains material that is reproduced and distributed under a license to Detroit Iron from Ford Motor Company. No further reproduction or distribution of the Ford Motor Company material is allowed without the express written permission of Ford Motor Company."

DETROIT IRON OFFICIAL LICENSED PRODUCT

If the total radial runout still exceeds the limits shown, match the highest radial point on the tire with the lowest radial point on the wheel and again measure the radial runout of the assembly on the car.

If the wheel-tire assembly is still over the limit for either radial or lateral runout and the wheel itself is within the wheel runout specification, the tire should be replaced.

c. Use test tires to evaluate original tires.

NOTE: Before removing original tires and wheels, mark them as to location (right front—left front, etc.) and position (mark the stud nearest the tire valve). Test tires must be balanced on the vehicle.

SPECIAL NOTE: (Alternate method in place of using test tires). Using ROTUNDA TIRE UNIFORMITY INDICATOR, Part No. DRE-008, when available, or an equivalent uniformity indicator, will measure loaded radial runout of the tires. This machine will give the total change in tire radius under normal vehicle load conditions.

d. Run-down rumble.

A run-down or coast-down rumble noise in neutral may still be evident after a complete tire and driveline diagnosis on vehicles with rear coil springs. This condition could be the result of spring surge and is dampened out by the installation of a spring damper kit. Each kit contains 24 rubber dampers (12 for each spring) and 4 clips to retain the dampers to the center section of the spring. In some cases, 18 or 24 dampers may be required per spring. An additional clip should be installed to separate each set of 12 dampers if 24 are used on one spring.

RADIAL PLY TIRE

Customers not already familiar with radial ply tires and their advantages, may question the under-inflated appearance, even though the pressure is to specification. The customer must be advised that this is a normal condition and is not detrimental to the tire.

Certain road and loading conditions may cause a slight whine to be induced by the road gripping characteristic of the tread. In some cases, this whine may be misinterpreted as rear axle whine. However, rear axle whine will usually vary with a change from drive, cruise or float at a given speed. Tire tread noise will remain virtually constant under the same conditions. In the event this whine condition is experienced on a customer's car, he should be advised that this is a characteristic of this radial ply tire tread design.

The use of the new Radial Tire design with increased tire life, improved handling ability and improved stopping characteristics has resulted in increased tire noise. The "sizzle" noise is caused by reaction of the tire tread to the road surface.

If after all N.V.H. diagnostic procedures have been evaluated and a noise and slight vibration can still be heard, proceed to tip-in moan noise.

TIP-IN MOAN NOISE

Tip-in moan is a term used to describe a noise that can be induced by light to medium acceleration at speeds of 40 MPH and above. A vibration felt in the floor pan may also accompany the moan noise. The noise is a by-product of a slight bending cycle condition of the engine crankshaft caused by the firing impulses of the engine. This bending cycle follows back through the transmission and sets up a vibration that affects body sheet metal and/or floor panels. A tuning fork is a good example of this. When striking an object with a tuning fork, while holding it, a noise can be heard and the vibration can be felt.

To damp or tune out this condition, on some models, a vibration damper tuned to the appropriate frequency has been attached to the bottom of the transmission extension housing. The damper usually consists of an arm and a weighted end.

For Test Purposes Only

To determine if a tip-in moan condition exists which may be corrected with a vibration damper, the following procedure may be used.

1. Loosen the transmission bell housing to engine attaching bolts 1/2 to 1 turn.
2. Drive the vehicle in the problem speeds and driving modes. If the moan noise/vibration is eliminated or significantly reduced, an appropriate damper may be installed for solution of the customer's concern. If the moan condition still exists, investigate exhaust system, engine mounts and engine accessories.
3. **RETORQUE ALL LOOSENED BOLTS TO SPECIFICATION.**

"This publication contains material that is reproduced and distributed under a license to Detroit Iron from Ford Motor Company. No further reproduction or distribution of the Ford Motor Company material is allowed without the express written permission of Ford Motor Company."